TRUE FOOD SERVICE EQUIPMENT, INC.
2001 East Terra Lane • O'Fallon, Missouri 63366
(636)240-2400 • Fax (636)272-2408 • (800)325-6152 • Intl Fax# (001)636-272-7546
Parts Dept. (800)424-TRUE • Parts Dept. Fax# (636)272-9471 • www.truemfg.com

Project Name: _____
Location: _____
Item #: _____ *Qty:* _____
Model #: _____

AIA #

SIS #

Model:
GDM-12F

Glass Door Merchandiser:
Swing Door Freezer

GDM-12F

- The world's #1 manufacturer of glass door merchandisers.
- Designed using the highest quality materials and components to provide the user with an attractive, point of purchase merchandiser that brilliantly displays frozen food and ice cream, resulting in high impulse sales.
- Oversized, factory balanced, refrigeration system holds -10°F (-23.3°C). Ideal for ice cream and frozen food products.
- Exterior - non-peel or chip black laminated vinyl; durable and permanent.
- Interior - attractive, NSF approved, white aluminum interior liner with stainless steel floor.
- Self closing door. Positive seal, torsion type closure system.
- Triple pane thermal glass door assembly with mitered plastic channel frame.
- Entire cabinet structure is foamed-in-place using Ecomate. A high density, polyurethane insulation that has zero ozone depletion potential (ODP) and zero global warming potential (GWP).

Bottom mounted units feature

- "No stoop" lower shelf to maximize product visibility.
- Easily accessible condenser coil for cleaning.

ROUGH-IN DATA

Specifications subject to change without notice.
Chart dimensions rounded up to the nearest ⅛" (millimeters rounded up to next whole number).

Model	Doors	Shelves	Cabinet Dimensions (inches) (mm) L	D†	H*	HP	Voltage	Amps	NEMA Config.	Cord Length (total ft.) (total m)	Crated Weight (lbs.) (kg)
GDM-12F	1	3	24⅞ 632	23⅜ 594	62⅜ 1585	⅓ N/A	115/60/1	7.4 N/A	5-15P	9 2.74	255 116

† Depth does not include 1⅜" (35 mm) for door handle and 1" (26 mm) for rear bumpers.
* Height does not include 1" (26 mm) for upper door hinge.

8/12 Printed in U.S.A.

APPROVALS:

AVAILABLE AT:

Model:
GDM-12F

Glass Door Merchandiser:
Swing Door Freezer

STANDARD FEATURES

DESIGN
- True's glass door freezers are designed with enduring quality that protects your long term investment.
- True's commitment to using the highest quality materials and oversized refrigeration systems provides the user with colder product temperatures, and lower utility costs in an attractive merchandiser that brilliantly displays frozen food and ice cream.

REFRIGERATION SYSTEM
- Factory engineered, self-contained, capillary tube system using environmentally friendly (CFC free) R404A refrigerant.
- Extra large evaporator coil balanced with higher horsepower compressor and large condenser; maintains -10°F (-23.3°C).
- Sealed, cast iron, self-lubricating evaporator fan motor(s) and larger fan blades give True merchandisers a more efficient low velocity, high volume airflow design. This unique design ensures colder standard temperatures and faster recovery in high use situations.
- Bottom mounted condensing unit positioned for easy maintenance. "No stoop" lower shelf maximizes visibility by raising merchandised product to higher level.
- Automatic defrost system time-initiated, temperature-terminated. Saves energy consumption and provides shortest possible defrost cycle.

CABINET CONSTRUCTION
- Exterior - non-peel or chip black laminated vinyl; durable and permanent.
- Interior - attractive, NSF approved, white aluminum liner with stainless steel floor.
- Insulation - entire cabinet structure is foamed-in-place using Ecomate. A high density, polyurethane insulation that has zero ozone depletion potential (ODP) and zero global warming potential (GWP).
- Welded, heavy duty steel frame rail, black powder coated for corrosion protection.
- Frame rail fitted with leg levelers.
- Door sign decal. Variety of decal options available.

DOOR
- Triple pane thermal insulated glass door assembly with mitered plastic channel frame.
- Door fitted with 12" (305 mm) long integrated handle.
- Self closing door. Positive seal, torsion type closure system.
- Magnetic door gaskets of one piece construction, removable without tools for ease of cleaning.

SHELVING
- Three (3) adjustable, heavy duty PVC coated wire shelves 20 13/16"L x 16 3/4"D (529 mm x 426 mm). Four (4) chrome plated shelf clips included per shelf.
- Shelf support pilasters made of same material as cabinet interior; shelves are adjustable on ½" (13 mm) increments.

LIGHTING
- Safety shielded fluorescent interior lighting.
- Cabinet lighting utilizes electronic ballast and T-8 bulbs for brighter illumination, longer bulb life and increased energy efficiency.

MODEL FEATURES
- Evaporator is epoxy coated to eliminate the potential of corrosion.
- See our website www.truemfg.com for latest color and sign offerings.
- Backguard and floor rack ensure optimum airflow.
- Listed under NSF-7 for the storage and/or display of packaged or bottled product.

ELECTRICAL
- Unit completely pre-wired at factory and ready for final connection to a 115/60/1 phase, 15 amp dedicated outlet. Cord and plug set included.

115/60/1
NEMA-5-15R

OPTIONAL FEATURES/ACCESSORIES
Upcharge and lead times may apply.
- ❑ White exterior.
- ❑ Stainless exterior.
- ❑ Black aluminum interior liner with black shelving.
- ❑ Stainless interior liner.
- ❑ 2½" (64 mm) diameter castors.
- ❑ LED Lighting.
- ❑ Novelty baskets.
- ❑ Pricing strips.
- ❑ Remote cabinets (condensing unit supplied by others; system comes standard with 404A expansion valve and requires R404A refrigerant). Consult factory technical service department for BTU information. All remote units must be hard wired during installation.

PLAN VIEW

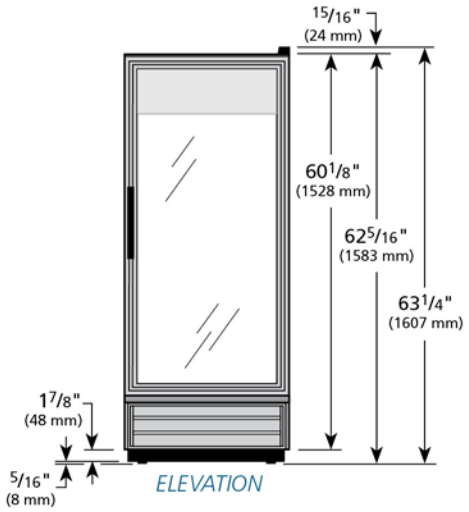

ELEVATION

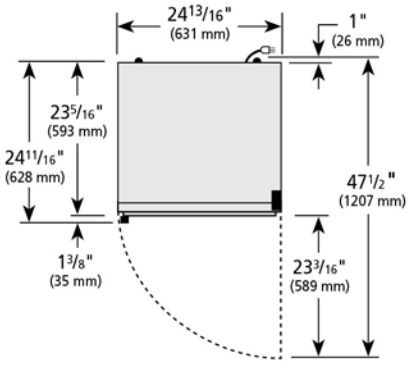

PLAN VIEW

WARRANTY
One year warranty on all parts and labor and an additional 4 year warranty on compressor. (U.S.A. only)

METRIC DIMENSIONS ROUNDED UP TO THE NEAREST WHOLE MILLIMETER

SPECIFICATIONS SUBJECT TO CHANGE WITHOUT NOTICE

Model	Elevation	Right	Plan	3D	Back
GDM-12F	TFAY57E	TFAY57S	TFDY15P	TFAY573	

TRUE FOOD SERVICE EQUIPMENT
2001 East Terra Lane • O'Fallon, Missouri 63366 • (636)240-2400 • Fax (636)272-2408 • (800)325-6152 • Intl. Fax# (001)636-272-7546 • www.truemfg.com

Suburban Bowery