Project_____

Item No._____

Quantity_____

SOLOFILTER Solstice Electric Series
SFSE14, 14T, 148 (R,X), 18 (R), 184 (R) Fryer

SFSE14 (R,X) w/ standard SSTC

SFSE14T (R,X) w/ optional rear casters

SFSE148 (R,X) w/ optional Digital Control

SFSE18 (R) w/ optional I12 computer & Basket Lifts, front / rear casters

** EnergyStar Qualified Model

APPLICATION

For Space Saving filtering and high production frying in one single Solo cabinet, specify Pitco SoloFilter Solstice Electric Models SFSE14, 14T, 148 (RX) or 18 (R), 184 (R) fryers with multiple heat input (kilowatt) options. The Solstice electric fryer comes in numerous sizes to accommodate different product frying applications and uses highly reliable fixed heating elements for that EnergyStar™** performance. Space saving design uses environmentally friendly mercury-free contactors, the simple two step Solstice filter makes oil filtering convenient and fast in keeping the oil clean to produce fresher products and to help maximize oil life and profits.

MODELS AVAILABLE

SE14 Series (40-50 lbs, 14 x 14" fry area)
- ❑ ***SFSE14*** 17kW/hr
- ❑ ***SFSE14R**** 22kW/hr
- ❑ ***SFSE14X**** 14kW/hr

SE14T Series (20-25 lbs, 7 x 14-9/32" fry area per side for this twin tank fryer)
- ❑ ***SFSE14T*** 17kW/hr (8.5kW per tank side)
- ❑ ***SFSE14TR*** 22kW/hr (11kW per tank side)
- ❑ ***SFSE14TX*** 14kW/hr (7kW per tank side)

SE148 Series (60 lbs, 14 x 18" fry area)
- ❑ ***SFSE148*** 17kW/hr
- ❑ ***SFSE148R*** 22kW/hr
- ❑ ***SFSE148X*** 14kW/hr

SE184 Series (60 lbs, 18 x 14" fry area)
- ❑ ***SFSE184**** 17kW/hr
- ❑ ***SFSE184R*** 22kW/hr

SE18 Series (70-90 lbs, 18 x 18" fry area)
- ❑ ***SFSE18*** 17kW/hr
- ❑ ***SFSE18R*** 22kW/hr

STANDARD FEATURES
- Tank - stainless steel construction
- Cabinet - stainless steel front, door and sides
- Fixed heating elements
- Solid State T-Stat (SSTC) w/melt cycle and boil out mode
- Mercury Free heating contactors
- High Temperature safety limit switch
- Drain valve interlock
- 1 ¼" (3.2 cm) Full port drain valve for fast draining
- 10" (25.4 cm) adjustable legs, easier access to clean
- Drain Line Clean out rod
- Element rack
- Removable basket hanger, requires no tools
- Fryer cleaning brush
- Fryer cleaner sample packet
- Choice of basket options:
  - ❑ 2-Twin Baskets
  - ❑ 1-Full Basket (not available on 14T or Basket Lifts)

STANDARD FILTER FEATURES & ACCESSORIES
- Easy Two Step Filtering
- Extra Large 3" (7.6cm) curved drain spout virtually eliminates splashing and swivels for oil disposal
- 8 gpm filter pump for fast refill times
- Self Aligning filter connection for effortless hookup
- Rear oil return for bottom cleaning
- Filter pan is stainless with rear wheels for easy handling
- Filter pan lid is self storing and out of the way
- Fryer crumb scoop
- Filter shovel scoop
- Filter paper envelope starter pack
- Filter powder sample

OPTIONS & ACCESSORIES (AT ADDITIONAL COST)
- ❑ Digital Controller (2 timers with melt cycle and boil out mode)
- ❑ Intellifry I12 Computer (12 elastic timers w/melt cycle & boil out)
- ❑ Backup thermostat (only on digital and I12 computer)
- ❑ Basket Lift (must be ordered with Digital control or Computer)
- ❑ Stainless steel back (not available with basket lift)
- ❑ 10" (25.4 cm) adjustable rear fixed rigid casters only
- ❑ 10"(25.4cm) adjustable rear and front locking rigid casters
- ❑ Tank cover
- ❑ 3-Triple Baskets (not available on 14T or Basket Lifts)
- ❑ Consult Factory for other basket configurations
- Splash Guard reversible ❑ " ❑ 8" ❑ 12" ❑ 18"
- ❑ Work shelves call factory for specifications and availabilty
- ❑ Fish Grids only available on SE18 and SE18R
- SoloFilter System Options
  - ❑ Filter Flush hose ❑ Filter pump heaters
  - ❑ Paperless filter ❑ Waste Oil Management hook up
  - ❑ Filter crumb catch
- ❑ Institutional Prison security package
- ❑ BNB Dump Station, see BNB spec sheet for details
- ❑ 6' Power Cord (14KW and 17KW 3ph, 208V & 240V 3Phase only)
- ❑ ***SPIN***FRESH See Spec Sheet L10-524 for details

SOLOFILTER Solstice Electric Series SFSE14, 14T, 148 (R,X), 18 (R), 184 (R) Fryer

Pitco Frialator, Inc • P.O. Box 501, Concord, NH 03302-0501 • 509 Route 3A, Bow, NH 03304
603-225-6684 • FAX: 603-225-8497 •www.pitco.com

L10-172 Rev 3 04/12 Printed in the USA

Suburban Bowery

SOLOFILTER Solstice Electric Series SFSE14, 14T, 148 (R,X), 18 (R), 184 (R) Fryer

SOLOFILTER Solstice Electric Series SFSE14, 14T, 148 (R,X), 18 (R),184 (R) Fryer

TABLE					
MODEL	DIM A	DIM B	DIM C	DIM D	DIM E
SE14,14T (R,X)	15 5/8 [39.7]	48 5/16 [122.8]	21 27/32 [55.5]	21 5/8 [54.9]	1 5/16 [3.3]
SE148 (R,X)	15 5/8 [39.7]	48 5/16 [122.8]	24 27/32 [63.1]	20 5/8 [52.3]	3 5/16 [8.4]
SE18 (R)	19 5/8 [49.8]	52 5/16 [132.9]	24 27/32 [63.1]	20 5/8 [52.3]	1 5/16 [3.3]
SE184 (R)	19 5/8 [49.8]	52 5/16 [132.9]	21 27/32 [55.5]	21 5/8 [54.9]	1 5/16 [3.3]

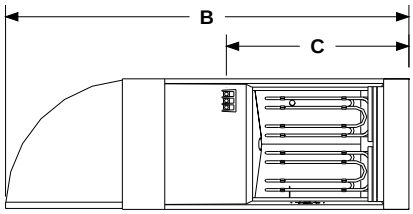

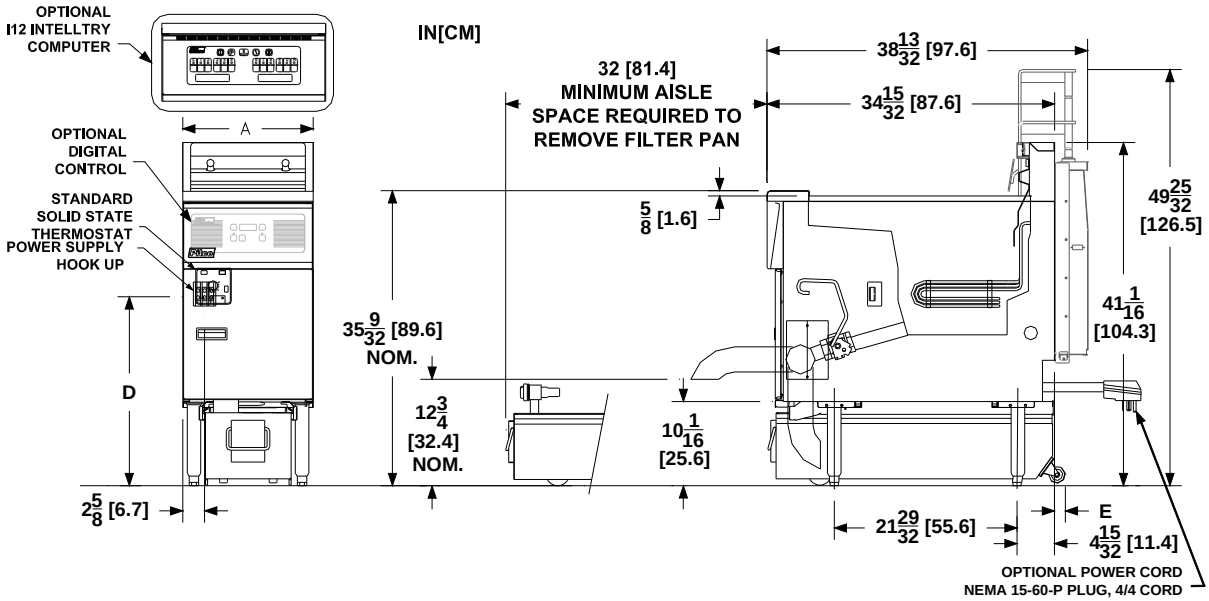

INDIVIDUAL FRYER SPECIFICATIONS			SYSTEM SHIPPING INFORMATION (Approximate)			
Model	Cooking Area & Depth	Oil Capacity	Shipping Weight	Shipping Weight w B/L	Shipping Crate Size H x W x L	Shipping Cube
SFSE (14, 14R, 14X)	14 x 14 x 4 in (35.6 x 35.6 x 10.2 cm)	40-50 lbs (18-23 kg)	300 lbs (136 kg)	350 lbs 159 kg)	45 x 19 x 36 in 114.3 x 48.3 x 91.4 cm	17.8 ft^3 0.5 m^3
SFSE (14T, 14TR, 14TX) * per Tank side	7 x 14 9/32 x 4 in * (17.8 x 36.3 x 10.2 cm)	20-25Lbs * (9-11.5 kg)	330 lbs (150 kg)	380 lbs (172 kg)	45 x 19 x 36 in 114.3 x 48.3 x 91.4 cm	17.8 ft^3 0.5 m^3
SFSE (148, 148R, 148X)	14 x 18 x 4 in (35.6 x 45.7 x 10.2 cm)	60 lbs (27 kg)	315 lbs (143 kg)	365 lbs (165 kg)	45 x 19 x 36 in 114.3 x 48.3 x 91.4 cm	17.8 ft^3 0.5 m^3
SFSE (18, 18R)	18 x 18 x 4-3/4 in (45.7 x 45.7 x 12.1cm)	70-90 lbs (32-41 kg)	376 lbs (170.5 kg)	426lbs (193 kg)	59 x 23 x 44 in 149.8 x 58.4 x 111.7 cm	34.6 ft^3 1.0 m^3
SFSE (184, 184R)	18 x 14 x 4-3/4 in (45.7 x 35.6 x 12.1cm)	60 lbs (27 kg)	376 lbs (170.5 kg)	426lbs (193 kg)	59 x 23 x 44 in 149.8 x 58.4 x 111.7 cm	34.6 ft^3 1.0 m^3

FILTER SPECIFICATIONS				
Models	Pan Oil Capacity	Filter Media Paper Envelope	Filter Pump Motor	Filter Pump Rated Flow
SFSE14,14T (R,X)	66 lbs (30 kg)	10 x 20-1/2 in (25.4 x 52.1 cm)	1/3 HP 50/60 Hz	8 GPM (30.3 LPM) @ 60 Hz 6.7 GPM (25.4 LPM) @ 50 Hz
SFSE 148 (R,X)	70 lbs (32 kg)	10 x 20-1/2 in (25.4 x 52.1 cm)		
SFSE 18, 184 (R)	90 lbs (41 kg)	14 x 22 in (35.6 x 55.9 cm)		

ELECTRICAL REQUIREMENTS		Nominal Amps Per Line (50/60 HZ)											
		Single Phase (2 wire + ground)					3 Phase (3 wire + ground)				3 Phase "Y" (4 wire + ground)		
Model	KW/Hr	208V	220V	230V	240V	480V	208V	220V	240V	480V	380/220V	400/230V	415/240V
SFSE (14, 14T, 148, 18, 184)	17	82	78	74	71	36	48	45	41	21	26	25	24
SFSE (14R, 14TR, 148R, 18R, 184R)	22	106	100	96	92	46	62	58	53	27	34	32	31
SFSE (14X, 14TX, 148X)	14	67.3	64.7	60.9	58.3	29.2	38.9	36.7	33.7	16.8	21.3	20.2	19.5

Note: 1. Each fryer requires it's own separate power cord. **2.** Power supply for Basket Lifts and Filter motor is wired into the fryer's high voltage line terminal block, except for 480V which requires another separate 115V (6.8 amp) power cord connection to the unit.

SHORT FORM SPECIFICATIONS

Provide Pitco Solstice Electric Model (SE xxx) electric fryer. Fryer shall be xx-xx lbs oil capacity, xxx kW/hr, "xx by xx" cook area, SS peened tank, stainless front, door,sides. Fixed immersion type heating elements with high temp alloy sheath, mercury-free contactors, drain valve interlock, 1-1/4" full port drain, 3/16" bottom hinge with standard solid state thermostat with melt cycle and boil out (or specify optional digital or computer controls). Drain line shall be 3" (7.8cm) diameter with a swivel drain spout for oil disposal. Filter pickup assembly use envelope filter paper. 8 GPM (25.4 LPM 50hz) filter pump. Filter piping to be self aligning, filter lid integral to cabinet, filter pan to have rear casters for portability, two step filter process. Provide options and accessories as follows.

Pitco Frialator, Inc • P.O. Box 501, Concord, NH 03302-0501 • 509 Route 3A, Bow, NH 03304
603-225-6684 • FAX: 603-225-8497 • www.pitco.com
L10-172 Rev 3 04/12 Printed in the USA

Suburban Bowery