CNH40 SERIES
CRISP 'N HOLD CRISPY FOOD STATIONS
(with forced air heating system)

CNH40
(shown without legs)

Model Number	Capacity	Overall Dimensions						Number of Sections (with all product dividers installed)	Shipping Weight	
		Height		Depth		Width				
	Cubic Inches	in	mm	in	mm	in	mm		lbs	kgs
☐ CNH40	2540	$20^3/_4$*	527	29	737	40	1016	6	140	64

* Height includes 3" legs (NSF requirement for units over 80 lbs). Height without legs is 17".

CONSTRUCTION... Welded cabinet construction with outer cabinet welded to cabinet liner. Fasteners attach top and back panels for access to heater components. Rear-mounted cord with stainless steel cord wrap.

CABINET MATERIAL... All stainless steel construction: 20 gauge polished exterior and 20 gauge interior. High temperature polycarbonate rail on front of cabinet to minimize hot surface temperatures in serving area.

INSULATION... High density fiberglass, full 1" thick continuous wrap-around type in bottom and sides.

FOOD BAY... Removable all stainless steel food grate. Embossed surface with precision engineered holes to allow even heating. Slotted to accommodate up to five stainless steel product dividers.

FILTER... Removable filter traps oils. Dishwasher-safe.

COLLECTION PAN... Integrated bottom mounted pan collects excess oils and pulls out for cleaning.

LEGS... 3" legs (NSF requirement). Legs may be removed if unit is bolted to counter

CONTROLLER... Solid state electronic temperature controller with digital display and low temperature alarm located on rear of cabinet. On/off toggle switch with rubber boot.

HEATING SYSTEM... Forced air heating system located in rear housing. Motor isolated from heated air for extended life. Electrical resistance 900 watt heaters with forced air blowers and ducts to direct warm air. Heated air is discharged through circular openings in the bottom of a grate. Grate embossed with circular texture to reduce hot metal contact with food.

ELECTRICAL CHARACTERISTICS... Operates on 208 volts, 2890 watts, 14 amps, 60 Hz, single phase. NEMA 6-20P. Six foot rubber cord with grounded plug.

PERFORMANCE... Capable of heating to 190° F (88° C). Preheat to 190°F (88° C) in approximately 10 minutes.

ACCESSORIES/OPTIONS...
- ☐ 240 volt electrical configuration
- ☐ Additional product dividers

Specifications subject to change through product improvement & innovation.

CARTER-HOFFMANN
1551 McCormick Ave., Mundelein, IL 60060
Tel (847) 362-5500 • (800) 323-9793 • Fax (847) 367-8981
www.carter-hoffmann.com

Suburban Bowery

Printed in U.S.A. EXX 0309
Carter-Hoffmann is a trademark of Carter-Hoffmann LLC

CNH40
CRISPY FOOD STATION

Since 1947, Foodservice Equipment That Delivers!

FEATURES & BENEFITS

LARGE FOOD BAY.. Precision engineered food holes and textured pattern to minimize hot metal contact with food and optimize air circulation. Product tray and dividers are removable for easy cleaning.

COUNTER-TOP DESIGN... Unit can be placed on any counter top, eliminating the need for heat lamps.

STAINLESS STEEL CONSTRUCTION... All stainless steel for durable wear and easy cleaning. Rear-mounted cord wrap to stow excess cord when not needed.

COOL RIM... Polycarbonate bar mounted to front of cabinet stays cool to touch and protects users from burns.

EXCLUSIVE HEATER DESIGN... Heater components isolated in rear of cabinet, protected from oil migration. Heating system provides a stream of warm air to maintain crispy food serving temperatures and extend holding time. Warm air is forced through bottom food grate and drawn through filter to maintain constant circulation and warm blanket over and through the food. Controls moisture accumulation and maintains food crispness. Extends the life of fried food by as much as 4 times over heat lamps. Factory pre-set temperature of 190°F. Internal thermostat accessible with tools for adjustment.

EXPANDED HOLDING... Product dividers expand holding capability by dividing food bay into separate compartments for multiple products. Or take them all out to create one large bay to hold more of a single product.

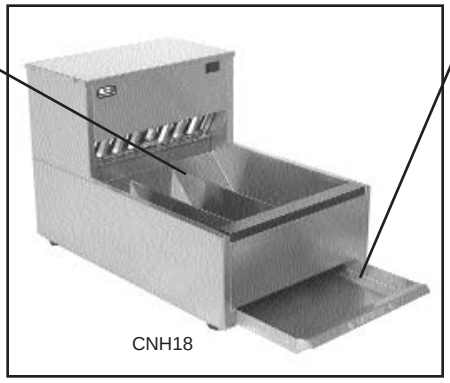

CNH18

COLLECTION PAN... Fully integrated, bottom mounted pan collects excess oil drawn away from the food to keep food crisp. Removable for easy cleaning.

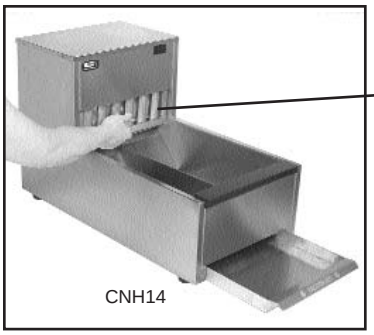

CNH14

REMOVABLE OIL FILTER... Exclusive design collects oil and vapors and protects heater components from oil accumulation. Easily removed for cleaning. Dishwasher safe.

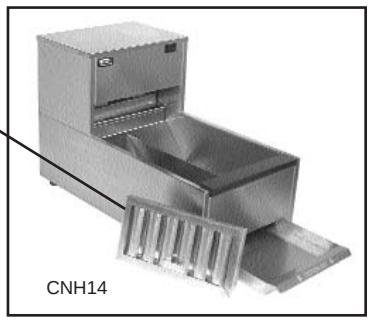

CNH14

1551 McCormick Avenue, Mundelein, Illinois 60060
Tel (847)362-5500 ▪ (800) 323-9793 ▪ Fax (847) 367-8981
www.carter-hoffmann.com
CARTER-HOFFMANN

CNH SERIES
CRISP 'N HOLD CRISPY FOOD STATIONS
(with forced air heating system)

CNH18

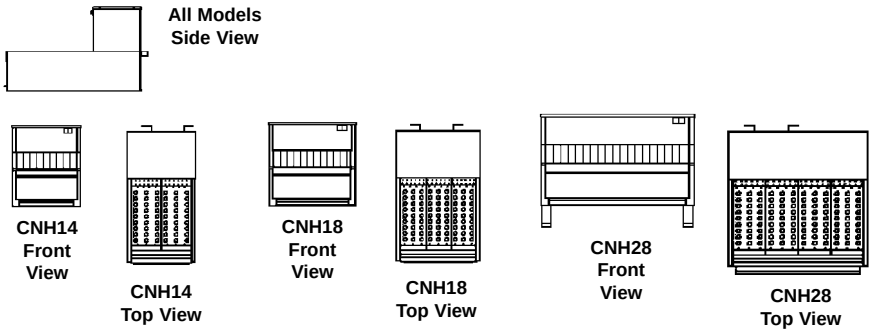

Carter-Hoffmann CAD Drawing Scale: 1/4" = 1'

Model Number	Capacity	Overall Dimensions						Number of Sections (with all product dividers installed)	Shipping Weight	
		Height		Depth		Width				
	Cubic Inches	in	mm	in	mm	in	mm		lbs	kgs
☐ CHN14	837	$17^3/_4$	451	29	737	$14^1/_4$	362	1	60	25
☐ CNH18	1050	$17^3/_4$	451	29	737	$17^9/_{16}$	446	2	67	30
☐ CNH28	1780	$20^3/_4$*	527	29	737	$28^1/_8$	714	3	98	44

* Height includes 4" legs (NSF requirement for units over 80 lbs).

CONSTRUCTION... Welded cabinet construction with outer cabinet welded to cabinet liner. Fasteners attach top and back panels for access to heater components. Rear-mounted cord with stainless steel cord wrap.

CABINET MATERIAL... All stainless steel construction: 20 gauge polished exterior and 20 gauge interior. High temperature polycarbonate rail on front of cabinet to minimize hot surface temperatures in serving area.

INSULATION... High density fiberglass, full 1" thick continuous wrap-around type in bottom and sides.

FOOD BAY... Removable all stainless steel food grate. Embossed surface with precision engineered holes to allow even heating. Slotted to accommodate stainless steel product dividers: one divider provided with CNH14, two provided with CNH18 and three provided with CNH28.

FILTER... Removable filter traps oils. Dishwasher-safe.

COLLECTION PAN... Integrated bottom mounted pan collects excess oils and pulls out for cleaning.

LEGS... 1" rubber feet on CNH14 and CNH18. 4" legs on CNH28 (NSF requirement).

CONTROLS... Electrcial mechanical thermostat mounted inside electrical portion of cabinet. Factory preset temperature of 190°F (88° C). Accessible with tools. On/off toggle switch with rubber boot.

HEATING SYSTEM... Forced air heating system located in rear housing. Motor isolated from heated air for extended life. Electrical resistance 900 watt heaters with forced air blowers and ducts to direct warm air. Heated air is discharged through circular openings in the bottom of a grate. Grate embossed with circular texture to reduce hot metal contact with food.

ELECTRICAL CHARACTERISTICS... CNH14 and CNH18 operate on 120 volts, 1820 watts, 15.1 amps, 60 Hz, single phase. NEMA 5-20P. CNH28 operates on 208 volts, 2890 watts, 14 amps, 60 Hz, single phase. NEMA 6-20P. Six foot rubber cord with grounded plug.

PERFORMANCE... Capable of heating to 190° F (88° C). Preheat to 190°F (88° C) in approximately 10 minutes.

ACCESSORIES/OPTIONS...
- ☐ 240 volt electrical configuration
- ☐ Additional product dividers

Specifications subject to change through product improvement & innovation.

CARTER-HOFFMANN
1551 McCormick Ave., Mundelein, IL 60060
Tel (847) 362-5500 • (800) 323-9793 • Fax (847) 367-8981
www.carter-hoffmann.com

Suburban Bowery

Printed in U.S.A. E70 1109

Carter-Hoffmann is a trademark of Carter-Hoffmann LLC

FEATURES & BENEFITS

CNH SERIES
CRISPY FOOD STATIONS

Since 1947, Foodservice Equipment That Delivers!

LARGE FOOD BAY.. Precision engineered food holes and textured pattern to minimize hot metal contact with food and optimize air circulation. Product tray and dividers are removable for easy cleaning.

COUNTER-TOP DESIGN... Unit can be placed on any counter top, eliminating the need for heat lamps.

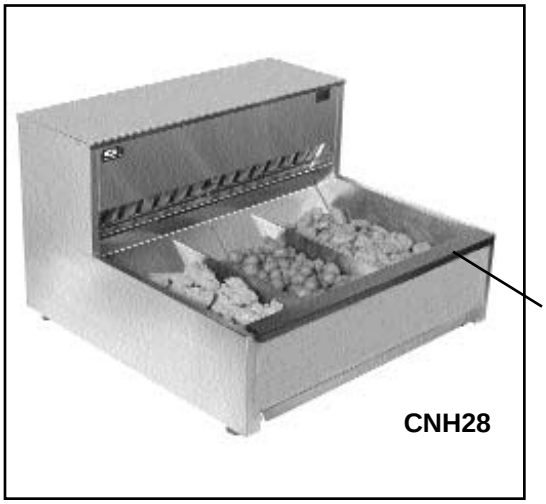

STAINLESS STEEL CONSTRUCTION... All stainless steel for durable wear and easy cleaning. Rear-mounted cord wrap to stow excess cord when not needed.

COOL RIM... Polycarbonate bar mounted to front of cabinet stays cool to touch and protects users from burns.

EXCLUSIVE HEATER DESIGN... Heater components isolated in rear of cabinet, protected from oil migration. Provides a stream of warm air to maintain crispy food serving temperatures and extend holding time. Warm air is forced through bottom food grate and drawn through filter to maintain constant circulation and warm blanket over and through the food. Controls moisture accumulation and maintains food crispness. Extends the life of fried food by as much as 4 times over heat lamps. Factory pre-set temperature of 190°F. Internal thermostat accessible with tools for adjustment.

EXPANDED HOLDING... Product dividers expand holding capability by dividing food bay into separate compartments for multiple products. Or take them all out to create one large bay to hold more of a single product.

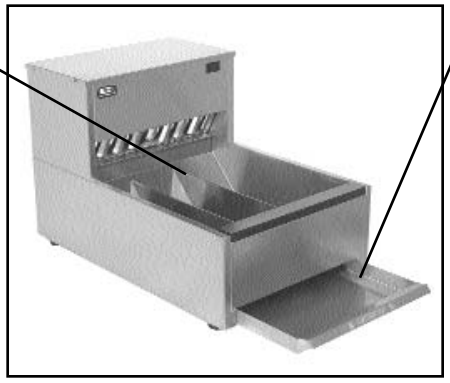

COLLECTION PAN... Fully integrated, bottom mounted pan collects excess oil drawn away from the food to keep food crisp. Removable for easy cleaning.

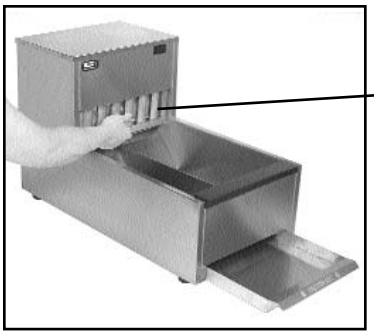

REMOVABLE OIL FILTER... Exclusive design collects oil and vapors and protects heater components from oil accumulation. Easily removed for cleaning. Dishwasher safe.

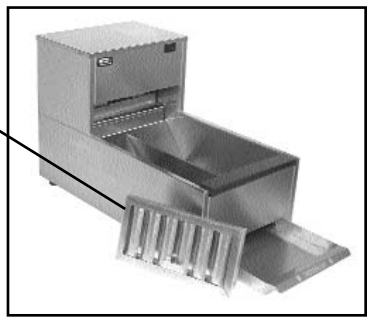

1551 McCormick Avenue, Mundelein, Illinois 60060
Tel (847)362-5500 ▪ (800) 323-9793 ▪ Fax (847) 367-8981
www.carter-hoffmann.com
CARTER-HOFFMANN

c UL us NSF