EC Series
Super Duty SPEC Line
Enclosed Mobile Cabinets

ITEM NO. _____

QUANTITY NO. _____

JOB NO. _____

SPEC NO. _____

EC1840-CTLPURC

SPECIFICATIONS:

- Stores and transport goods–retards dehydration!
- Constructed of all welded, reinforced, non-insulated aluminum. Sanitary and rustproof.
- Double pan top construction with reinforced brace, 1½" (38 mm) spacing between runners.
- Heavy duty, reinforced hinges and latch assure easy closing with a secure fit.
- Maneuvers easily on 5" polyurethane, swivel plate, double ball race casters.
- Optional 6” Heavy Duty Polyurethane Caster for maximum maneuverability.

OPTIONS:

Specify options by adding suffix to Model Numbers.

LC Locking Casters
LD Clear Acrylic Door
PP Prison Package - With non-removable hinges and holes in latch for padlock.

Lifetime Guarantee

Against Rust or Corrosion on All Aluminum Products.

Heavy Duty, reinforced, galvanized steel undercarriage, provides extra strength support.

Optional 6” Polyurethane Caster for maximum maneuverability.

LABORATORY CERTIFICATION AND APPROVAL SYMBOLS:

NSF REGISTERED

WIN-HOLT EQUIPMENT GROUP

439 Oak Street • Garden City, NY 11530 • Tel: 1-800-444-3595 • Fax: 516-222-0371
www.winholt.com • sales@winholt.com

NEW YORK • GEORGIA • TEXAS • CALIFORNIA

EC Series Super Duty SPEC Line Enclosed Mobile Cabinets

ITEM NO. _____

JOB NO. _____

SPEC NO. _____

Super Duty SPEC Line Enclosed Mobile Cabinets

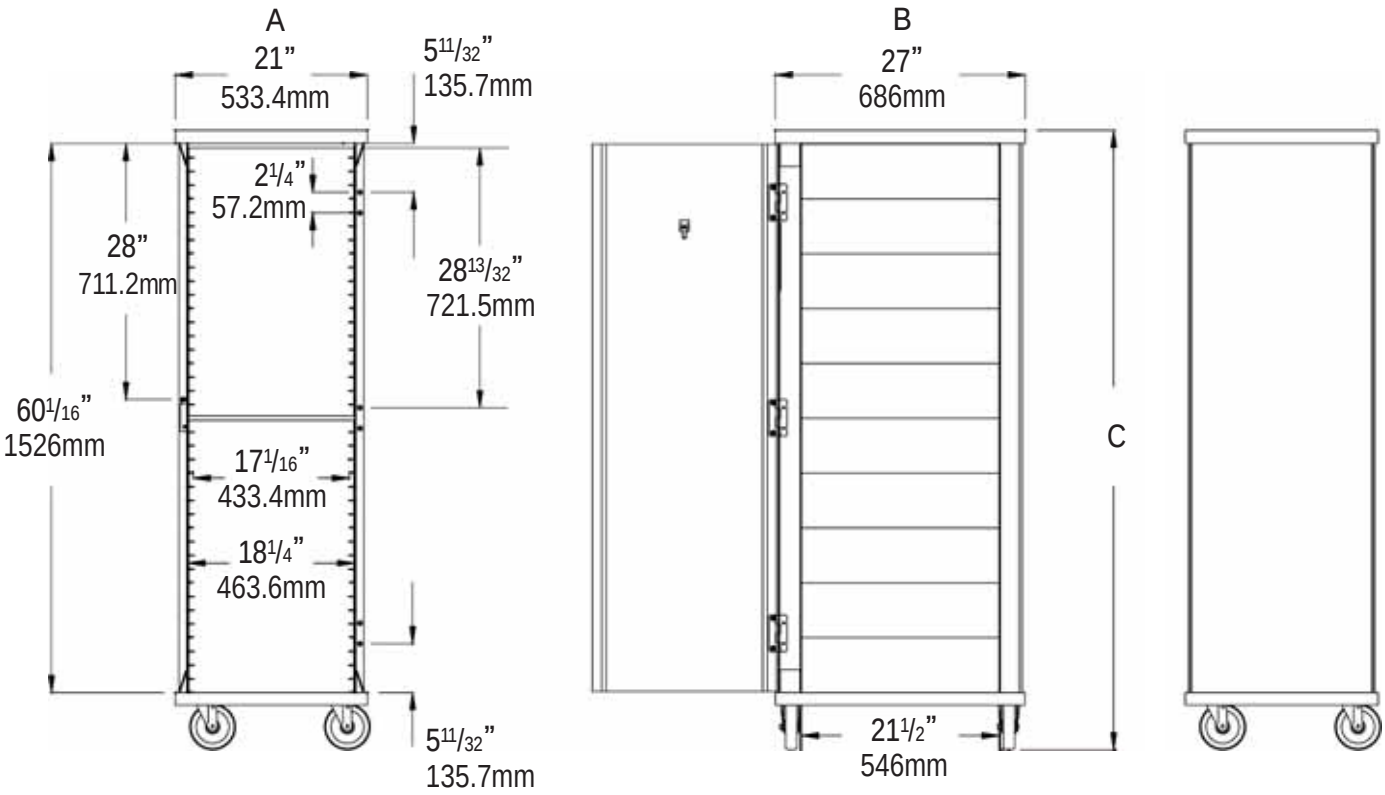

Front View | Left Side View | Back View

Model Number	Ordering Number	Overall Dimensions						Pan Capacity	Approx. Ship Weight	
		A Width		B Length		C Height				
		(in)	(mm)	(in)	(mm)	(in)	(mm)	18”x26”	(kg)	(lb)
Heavy Duty Enclosed Cabinet with Reinforced Undercarriage										
EC1840-CTL	110859	**21**	533	**27**	686	**68**	1,727	40	**115**	52
Extra Heavy Duty Enclosed Cabinet with Reinforced Undercarriage and Frame										
EC1832-CTLPURC	150383	**21**	533	**27**	686	**68**	1,727	32	**115**	52
EC1840-CTLPURC	110904							40	**120**	54
Replacement Caster Information										
7318	123051	Swivel Plate Caster with 5" Polyurethane Wheel							—	
7128	122438	5" Polyurethane Wheel							—	

Freight Class: 125

Win-Holt Equipment Group is a leading manufacturer of material & food handling equipment. Since 1946, retailers and restaurant chains have trusted Win-Holt’s equipment to ensure increased productivity and efficiency in their operation. Multiple locations reduce logistics and transportation costs. All Win-Holt associates are dedicated to customer satisfaction.

For general sales and engineering information only. All units are subject to change without notice. Please consult factory for certified specifications.

439 Oak Street • Garden City, NY 11530 • Tel: 1-800-444-3595 • Fax: 516-222-0371
www.winholt.com • sales@winholt.com

NEW YORK • GEORGIA • TEXAS • CALIFORNIA
Suburban Bowery