BUNN®

ITEM#

PROJECT

DATE

Portable Servers and Warmers for Satellite Brewers

1.5 Gallon GPR w/RWS1

(Server and Warmer sold separately)
Server Dimensions: 10.6" H x 6.7" W x 12.7" D
(26.9cm H x 17.0cm W x 32.3cm D)

Features

Portable Servers

- Models available with capacities up to 1 and 1½ gallons (3.8, 5.7 litres).
- Easily transported portable servers for remote service.
- Patented Safety-Fresh® brew-through lid with vapor seal and spill protection GPR servers.

Warmers

- Models available to accommodate 1 and 1½ gallon (3.8, 5.7 litres) servers.
- Legs are adjustable on RWS1 and RWS2.
- International electrical configurations available.

1 Gallon GPR w/bail handle

(Dimensions: 7.14" H x 6.7" W x 12.7" D
(18.1cm H x 17.0cm W x 32.2cm D)

1 Gallon GPR w/side handles

(Dimensions: 7.14" H x 10" W x 12.7" D
(18.1cm H x 25.4cm W x 32.2cm D)

For current specification sheets and other information, go to *www.bunn.com*.

Related Products

One Position Drip Tray
For use with Single/Single SH
Product No. : 26830.0000

One Position Drip Tray
For use with RWS1
Product No. : 20213.0103

Two Position Drip Tray
For use with Dual/Dual SH
Product No. : 27150.0000

Two Position Drip Tray
For use with RWS2
Product No. : 20213.0100

Model	Agency Listing
1GPR	NSF
1.5GPR	NSF
RWS1	UL LISTED NSF

Dimensions & Specifications

Model	Product #	Capacity	Cu. Ft.	Shipping Weight	Cord Attached
1GPR (bail handle)	12487.0001	1 gallon	1.0	8.5 lbs.	N/A
1GPR (side handles)	12487.0003	1 gallon	1.0	8.5 lbs.	N/A
1GPR-FF (bail handle, fast flow faucet)	12487.0005	1 gallon	1.0	9 lbs.	N/A
1.5GPR-FF (top handles, fast flow faucet)	20950.0004	1½ gallons	1.0	10 lbs.	N/A

Model	Product #	Volts	Amps	Watts	Capacity	Cu. Ft.	Shipping Weight	Cord Attached
RWS1 (plastic legs)	12203.0010	120	.8	100	1GPR or 1.5GPR	1.0	7 lbs.	Yes
RWS1 (satin nickel legs)	12203.0014	120	.8	100	1GPR or 1.5GPR	1.0	9 lbs.	Yes

1GPR
(side handles)

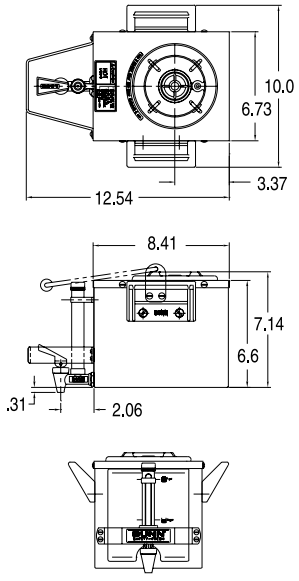

1GPR FF
(side handles)

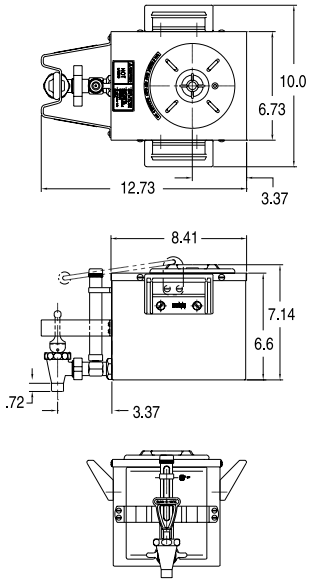

1.5GPR
(top handles)

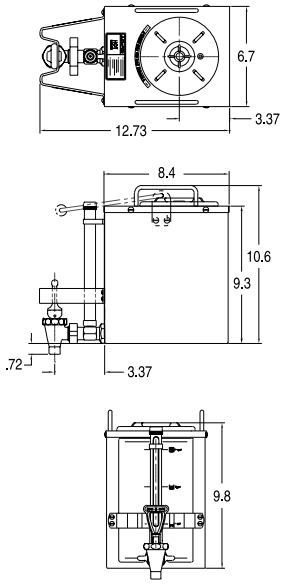

RWS1

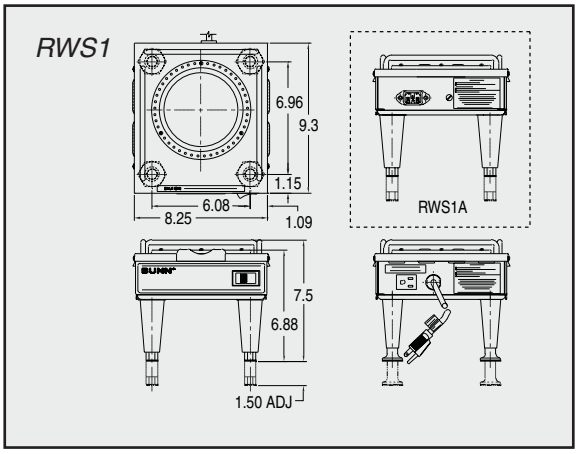

Bunn-O-Matic® Corporation - 1400 Stevenson Drive Springfield, Illinois 62703 • 800-637-8606 • 217-529-6601 • Fax 217-529-6644 • www.bunn.com

BUNN® practices continuous product research and improvement. We reserve the right to change specifications and product design without notice. Such revisions do not entitle the buyer to corresponding changes, improvements, additions or replacements for previously purchased equipment.

All dimensions shown in inches.

1/11 © Bunn-O-Matic Corporation

Suburban Bowery