Project_____

Item No._____

Quantity_____

Model SGM34, SGM24 and SGM1824 MEGAFRY Gas Fryers with Filtration

Unit shown:SGM34 with optional I12 computer, Filter and Casters

STANDARD FEATURES

- Tank - stainless steel construction
- Cabinet - stainless steel front, door, sides & splash back.
- Solstice Burner Technology
- Solid State T-Stat with melt cycle and boil out mode
- Matchless Ignition with DVI drain valve interlock
- 1 ¼" (3.2 cm) Full port drain valve
- Manual gas shutoffs and Rear gas manifold connection
- Integrated flue deflector
- 11" (27.9 cm) adjustable legs
- Tube screen
- Removable basket hanger(s)
- Drain Line Clean out rod & Cleaning brush
- Filter scoop shovel & Fryer crumb scoop
- Filter powder and fryer cleaner sample packets
- Filter paper envelope sample starter pack 14" x 22" (36 x 56 cm)

OPTIONS & ACCESSORIES (AT ADDITIONAL COST)

- ❑ Digital Controller
- ❑ Intellifry I12 Computer
- ❑ Backup thermostat
- ❑ Stainless Steel back
- ❑ 11" (27.9 cm) adjustable rear and front locking casters
- ❑ Flexible gas hose with quick disconnect
- ❑ Tank cover
- ❑ Flush hose
- ❑ Filter heater for solid shortening
- ❑ Paperless stainless steel mesh filter
- ❑ Institutional Prison security package
- ❑ Baskets see Configuration Table for options

STANDARD SPECIFICATIONS

CONSTRUCTION

- Solstice Burner Technology provides dependable heat transfer without the need for complex power blowers.
  - ✓ High volume production with 62% thermal efficiency
- Tank constructed of durable stainless steel with an extra smooth peened finish for easy cleaning.
- Long-lasting, high-temperature alloy stainless steel heat baffles for maximum heating and combustion efficiency.
- Stainless steel cabinet front, door, side and splash back
- Heavy duty 3/16" (.48 cm) door hinges
- Front 1 ¼" (3.2 cm) full port drain for quick draining.

CONTROLS

- Matchless Ignition and drain valve interlock safety system
- Solid State Thermostat with melt cycle and boil out mode
  - *Optional:* Digital Controller: Displaying 2 product timer
  - *Optional:* I12 Intellifry Computer: Time compensating computer with 12 product timer keys
- Integrated gas control valve acts as a manual valve, safety pilot valve, main valve, gas filter, pressure and regulator.
- Temperature limit switch safely shuts off all gas flow if the fryer temperature exceeds the upper limit.

FILTER SYSTEM

- Extra Large 3" (7.6 cm) curved drain spout virtually eliminates splashing and swivels for oil disposal.
- Filter pan is stainless steel with rear wheels for easy movement during cleaning.
- Connection to fryer is self-aligning for ease of use.
- Easy two step filtering. 1) Blue handle to drain tank
  2) Red Handle to return oil
- High flow pump and large return lines produce faster oil refill times.
- Filter pan lid stows in the cabinet and out of the way.
- Battery up to 4 MegaFry fryers per filter.

Optional Basket Configuration Table

Model	Option	Basket Size/Quantities: 5-3/4 X 23-1/4 (14.6 X 59.1)	Basket Size/Quantities: 10 X 23-1/4 (25.4 X 59.1)
SGM34	A	5	0
SGM34	B	4	1
SGM34	C	2	2
SGM34	D	0	3
SGM24	A	4	0
SGM24	B	2	1
SGM24	C	0	2
SGM1824	A	3	0
SGM1824	B	1	1

Model SGM34, SGM24 and SGM1824 MEGAFRY Gas Fryers with Filtration

Pitco Frialator, Inc • P.O. Box 501, Concord, NH 03302-0501 • 509 Route 3A, Bow, NH 03304
603-225-6684 • FAX: 603-225-8497 • www.pitco.com

L10-212 Rev 4 11/09 Printed in the USA

Suburban Bowery

Model SGM34, SGM24 and SGM1824 MEGAFRY Gas Fryers with Filtration

Model SGM34, SGM24 and SGM1824 MEGAFRY Gas Fryers with Filtration

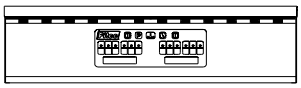

I12 INTELLIFRY COMPUTER

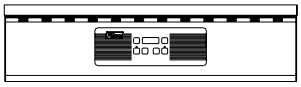

DIGITAL CONTROLLER

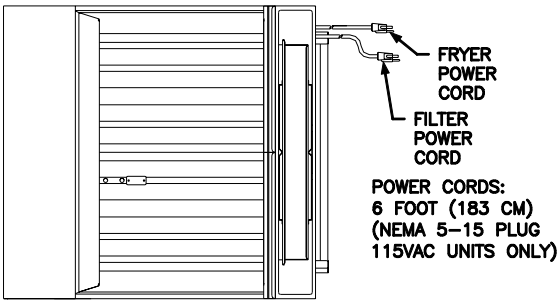

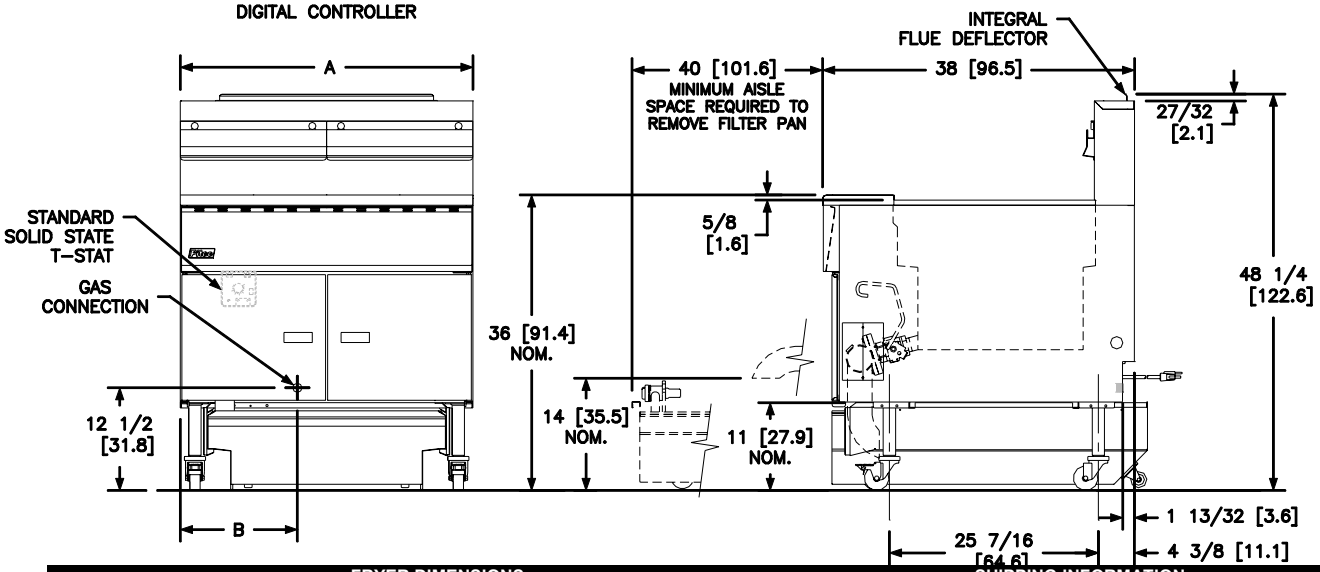

FRYER DIMENSIONS						SHIPPING INFORMATION		
Models	**"A" Dim**	**"B" Dim**	**Cook Area \ Depth**	**Oil Capacity**	**Gas Input / Hour**	**Shipping Weight / Unit**	**Shipping Cube**	**Shipping Dimensions H x W x L**
SGM34	35-5/8 in 90.5 cm	14-1/4 in 36.2 cm	34 x 24 x 4 in 86.4 x 61.0 x 10.2cm	200-210 lbs 91-95 Kg	210,000 BTU 61.6KW / 220 MJ	495 lbs 225 Kg	72 ft^3 2.04 m^3	58 x 41 x 52 in 147.3 x 104.1 x 132 cm
SGM24	25-5/8 in 65.1 cm	9-1/4 in 23.5 cm	24 x 24 x 4 in 61.0 x 61.0 x 10.2cm	140-150 lbs 64-68 Kg	165,000 BTU 48.4KW / 174 MJ	375 lbs 170 Kg	56 ft^3 1.56 m^3	57 x 36 x 47 in 144.8 x 91.4 x 119.4 cm
SGM1824	19-5/8 in 49.8 cm	6-1/4 in 15.9 cm	18 x 24 x 4 in 45.7 x 61.0 x 10.2cm	100-110 lbs 45-50 Kg	120,000 BTU 35.2KW / 128 MJ	250 lbs 113 Kg	33 ft^3 .93m^3	58 x 22½ x 43½ in 147.3 x 57.2 x 110.5 cm
Filter	N/A	N/A	Filter must be under the largest fryer in the battery	8% more than largest fryer in battery.	N/A	125 lbs / 57Kg Add 20 lbs / 9 Kg per fryer position	N/A Ships with fryer	N/A

GAS REQUIREMENTS			
Gas Rear Tee Manifold	**Fryers Per Manifold**	**Rear Tee Gas Connection Location**	**Gas Connection Size**
SGM34, SGM24, SGM1824	Maximum 560KBtu / 164 KW / 591 MJ per manifold. See Gas Input / Hour above.	Default location is to the left.Connection is field reversible to the right.	1-¼" NPT (1-¼" BSP CE) for 367KBtu / 108 KW / 387 MJ to 560 Kbtu / 164 KW / 591 MJ. 1" NPT (1" BSP CE) up to 366KBtu / 107 KW / 386 MJ. ¾" NPT (¾" BSP CE) for single units.
Gas Type	**Store Manifold Pressure**	**Burner Manifold**	*** Recommended Minimum**
Natural Gas	7" W.C. / 17.4 mbars / 1.75 KPa	4" W.C. / 10 mbars / 1 kPa	Check plumbing/gas codes for proper gas supply line sizing to sustain burner pressure when all gas appliance are full on.
Propane Gas	13" W.C. / 32.4 mbars / 3.25 KPa	10" W.C. / 25 mbars / 2.5 kPa	
Clearance Information	**Fryer Front**	**Fryer Sides, Rear, Bottom to any combustible materials**	**Fryer Flue Area**
All models	30" (76.2cm) minimum	6" (15.2 cm) Do not Curb Mount	Do not block / restrict flue gases from into hood or install vent hood drains over the flue.

ELECTRICAL REQUIREMENTS						
Options		**Voltage / Phase / Frequency**	**Amps**	**Additional Amps for Filter Heater**	**Number of Power Cords**	**Power Cord Locations**
Filter	8.0 GPM (30.3 LPM) 1/3 HP	115 / 1 / 60	7	3	1	At filter location
	6.7 GPM (25.4 LPM) 1/3 HP	220-230-240 / 1 / 50	3.6	1.5		
Fryer	Upgrade Controls, Solid State, Digital, Computer	115 / 1 / 60	1.7	N/A	1 cord per 4 fryers	Default is left
		220-230-240 / 1 / 50	0.9	N/A		

SHORT FORM SPECIFICATIONS

Provide Pitco Model SGM 34, 24 or 1824 tube fired gas fryer with Filtration. 304 SS tank, Fryer shall have a blower free Solstice atmospheric burner system, 62% thermal efficiency, thermostatic controls with melt cycle and boil mode. Indicator lights for power, heat and trouble. Matchless ignition system and drain valve interlock safety, separate manual gas shut off, 3/4" npt rear gas connection, recessed cabinet back, 1-1/4" Full port drain valve, 5/16" bottom hinge, manual reset high limit, easy to field upgraded controls. Drain line shall be 3" (7.6cm) diameter with a swivel drain spout for oil disposal. Filter pickup assembly shall have handles and utilize envelope type filter paper. Filter pump shall pump 8 GPM, 60 Hz (25.4 LPM, 50 Hz). Filter piping to be self-aligning for easy assembly. Filter lid shall be attached to the cabinet for ease of use. Filter pan shall have front stabilizer legs and rear rigid casters for portability. Provide accessories as follows.

TYPICAL APPLICATIONS

High volume production restaurants, stadiums, prisons, casinos, hotels frying a multitude of fried products fast and wanting to maintain food quality through filtering.

Pitco Frialator, Inc • P.O. Box 501, Concord, NH 03302-0501 • 509 Route 3A, Bow, NH 03304
603-225-6684 • FAX: 603-225-8497 • www.pitco.com L10-212 Rev 4 11/09 Printed in the USA

We reserve the right to change specifications without notice and without incurring any obligation for equipment previously or subsequently sold.

Suburban Bowery