TRUE FOOD SERVICE EQUIPMENT, INC.
2001 East Terra Lane • O'Fallon, Missouri 63366
(636)240-2400 • Fax (636)272-2408 • (800)325-6152 • Intl Fax# (001)636-272-7546
Parts Dept. (800)424-TRUE • Parts Dept. Fax# (636)272-9471 • www.truemfg.com

Project Name: _____
Location: _____
Item #: _____ *Qty:* _____
Model #: _____

AIA #
SIS #

Model:
TCGG-36-S

Display Case:
Stainless Steel Curved Glass Refrigerated Deli Case

TCGG-36-S

- True's curved glass deli case combines efficient, high volume merchandising and exceptional refrigeration with an elegant curved glass front for sophisticated presentation of deli products.
- High humidity gravity coil refrigeration system maintains 38°F to 40°F (3.3°C to 4.4°C) for the freshest display of meats, cheeses and deli products.
- Self-contained, environmentally friendly (CFC free) 134A refrigeration system.
- Cabinet is NSF-7 certified to hold open food product.
- Insulated double pane curved front glass provides maximum insulation value for greater efficiency and energy savings. Both panes are tempered for safety.
- Two (2) adjustable, lighted, cantilevered PVC coated shelves.
- Fluorescent lamps are low UV emitting to enhance product appearance and increase shelf life.
- All stainless steel interior and exterior.

ROUGH-IN DATA

Specifications subject to change without notice.
Chart dimensions rounded up to the nearest ⅛" (millimeters rounded up to next whole number).

Model	Doors	Shelves	Cabinet Dimensions (inches) (mm) L	D†	H	HP	Voltage	Amps	NEMA Config.	Cord Length (total ft.) (total m)	Crated Weight (lbs.) (kg)
TCGG-36-S	2	2	36¼ 921	35¼ 896	47¾ 1213	⅓ N/A	115/60/1	12.0 N/A	5-15P	9 2.74	460 209

† Depth does not include⅞" (23 mm) for door handles.

8/11 Printed in U.S.A.

APPROVALS:

AVAILABLE AT:

Model:
TCGG-36-S

Display Case:
Stainless Steel Curved Glass Refrigerated Deli Case

STANDARD FEATURES

DESIGN
- True's curved glass deli display case combines efficient, high volume merchandising and exceptional refrigeration with an elegant curved glass front for sophisticated presentation of deli products.
- Gravity coil refrigeration system guarantees the freshest display of meats, cheeses and deli products.

REFRIGERATION SYSTEM
- Factory engineered, self-contained, capillary tube system using environmentally friendly (CFC free) 134A refrigerant.
- Extra large evaporator coil balanced with higher horsepower compressor and large condenser maintains 38°F to 40°F (3.3°C to 4.4°C).
- High humidity gravity coil refrigeration system. Ideally suited for deli meats, cheeses and salads.
- Condensing unit located behind panel in back of unit. Entire system slides out for easy cleaning and maintenance.
- Automatic defrost system; time-initiated, time-terminated.

CABINET CONSTRUCTION
- Exterior - all stainless steel front, sides, back and top.
- Interior - all stainless steel sides and stainless steel floor with coved corners.
- Insulation - entire cabinet structure is foamed-in-place using Ecomate. A high density, polyurethane insulation that has zero ozone depletion potential (ODP) and zero global warming potential (GWP).
- Welded, heavy duty steel frame rail, black powder coated for corrosion protection.
- Frame rail fitted with leg levelers.

CURVED FRONT DISPLAY GLASS
- Insulated double pane glass provides maximum insulation value for greater efficiency and energy savings. Both panes are tempered for safety.

REAR DOORS
- "Low-E", double pane thermal glass inserts with mitered plastic channel frames.
- Each door fitted with 12" (305 mm) long black aluminum handle.
- Self-closing doors. Sliding doors ride on stainless steel V-Channel with stainless steel bearings for smooth, even, positive closure. Doors fit within plastic channel frame.

SHELVING
- Two (2) adjustable, lighted, white heavy duty PVC coated wire shelves 30 7/8" L x 22 5/32" D (785 mm x 563 mm). Shelving system is cantilevered with adjustable angle to maximize presentation.

LIGHTING
- Cabinet equipped with three (3) light sources for maximum product display; two (2) shelf mounted and one (1) cabinet mounted. Fluorescent lamps are low UV emitting to enhance product appearance and increase shelf life.

MODEL FEATURES
- Evaporator is epoxy coated to eliminate the potential of corrosion.
- Four (4) amp exterior scale receptacle.
- NSF-7 compliant for open food product.

ELECTRICAL
- Unit completely pre-wired at factory and ready for final connection to a 115/60/1 phase, 15 amp dedicated outlet. Cord and plug set included.

115/60/1
NEMA-5-15R

RECOMMENDED OPERATING CONDITIONS
- TCGG refrigerated models are designed to operate in an environment where temperature and humidity do not exceed 75°F (24°C) and 55% relative humidity.

OPTIONAL FEATURES/ACCESSORIES
Upcharge and lead times may apply.
- ❑ 6" (153 mm) standard legs.
- ❑ 6" (153 mm) seismic/flanged legs.
- ❑ 2½" (64 mm) diameter castors.
- ❑ 4" (102 mm) diameter castors.
- ❑ Ratchet locks.
- ❑ Additional lighted shelf (maximum of 3 shelves per cabinet).
- ❑ Non-lighted shelves.
- ❑ Lighted stainless steel mezzanine sheves.
- ❑ Non-lighted stainless steel mezzanine shelves.
- ❑ Remote cabinets (condensing unit supplied by others; system comes standard with 404A expansion valve and requires R404A refrigerant). Consult factory technical service department for BTU information. All remote units must be hard wired during installation.

PLAN VIEW

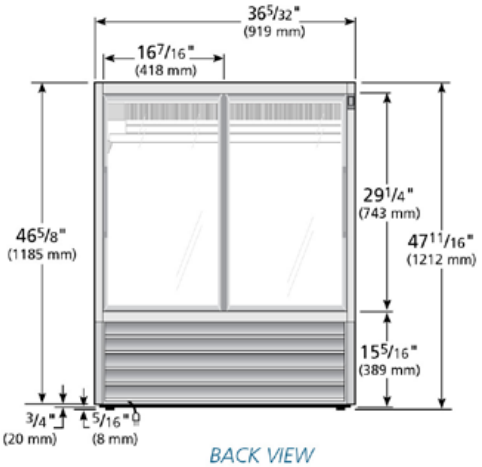

BACK VIEW

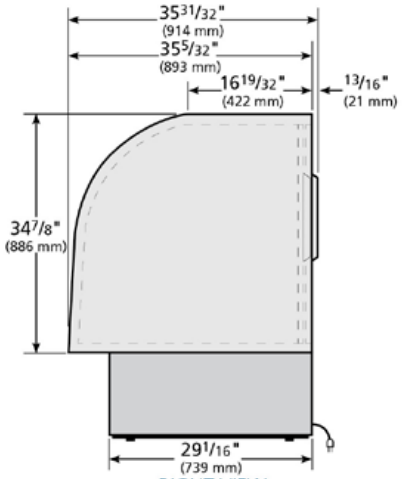

RIGHT VIEW

WARRANTY
One year warranty on all parts and labor and an additional 4 year warranty on compressor. (U.S.A. only)

METRIC DIMENSIONS ROUNDED UP TO THE NEAREST WHOLE MILLIMETER

SPECIFICATIONS SUBJECT TO CHANGE WITHOUT NOTICE

Model	Elevation	Right	Plan	3D	Back
TCGG-36-S	TFD047E	TFD047S	TFD047P	TFD0473	TFD047B

TRUE FOOD SERVICE EQUIPMENT
2001 East Terra Lane • O'Fallon, Missouri 63366 • (636)240-2400 • Fax (636)272-2408 • (800)325-6152 • Intl. Fax# (001)636-272-7546 • www.truemfg.com