BUNN®

ITEM#

PROJECT

DATE

TF Digital Sight Gauge Servers with bases

1 gallon TF Digital Servers

Dimensions: 20.6" H x 9.3" W x 13.0" D
(52.3cm H x 23.6cm W x 33.0cm D)

1.5 gallon TF Digital Servers

Dimensions: 22.7" H x 9.3" W x 13.0" D
(57.7cm H x 23.6cm W x 33.0cm D)

Features

BUNN ThermoFresh® Digital Servers

- Four-hour digital count-up timer.
- Volume indicator displays how much coffee is left inside the server.
- Digital sight gauge operates on four easily replaceable AAA batteries with an average 1-year lifespan. Display shows low battery symbol when replacement is needed.
- Vacuum insulated to keep coffee hot for hours.
- Unique lid design features a pour spout for easy emptying and cleaning.
- Contemporary styling and wrap program for maximum merchandising.
- Drip tray is easily removed for cleaning or to provide extra clearance for dispensing into pitchers.
- Large cup clearance allows for dispensing into cups, decanters and thermal carafes.
- Fast flow faucet.
- Translucent faucet guard provides increased visibility while dispensing.
- Brew-through lid.
- Soft-grip bail handle for easy transportation.
- Ideal for use with Single or Dual TF DBC Brewers.

For current specification sheets and other information, go to *www.bunn.com*.

Related Products

Dual TF DBC
Product No.: 34600.0001

(servers sold separately)

Single TF DBC
Product No.: 34800.0000

(server sold separately)

Orange Handle
Product No.: 43135.10002

ICB Tall
Product No.: 36600.0005

(server sold separately)

Brewer/Server Compatibility		
Brewer	*1.5 Gal TF w/base*	*1 Gal TF w/base*
ICB	No	No
ICB Twin	No	No
ICB *(tall)*	Yes	Yes
ICB Twin *(tall)*	Yes	Yes
ITCB	No	No
ITCB *(tall)*	Yes	Yes
Single TF	Yes	Yes
Dual TF	Yes	Yes

Model	Agency Listing
TF Server	NSF

Dimensions & Specifications

Model	Product #	Holding Capacity	Cubic Measure	Shipping Weight
TF Server, 1 Gal	42700.0000	1 gallon	2.6ft³	15 lbs.
digital, stainless finish with base		*(3.8 litres)*		
TF Server, 1 Gal	42700.0001	1 gallon	2.6ft³	15 lbs.
digital, black finish with base		*(3.8 litres)*		
TF Server, 1 Gal *Countdown Timer*	42700.0003	1 gallon	2.6ft³	15 lbs.
digital, stainless finish with base		*(3.8 litres)*		
TF Server, 1 Gal *Countdown Timer*	42700.0004	1 gallon	2.6ft³	15 lbs.
digital, black finish with base		*(3.8 litres)*		
TF Server, 1.5 Gal	42750.0000	1.5 gallon	2.8ft³	16 lbs.
digital, stainless finish with base		*(5.7 litres)*		
TF Server, 1.5 Gal	42750.0001	1.5 gallon	2.8ft³	16 lbs.
digital, black finish with base		*(5.7 litres)*		
TF Server, 1.5 Gal *Countdown Timer*	42750.0003	1.5 gallon	2.8ft³	16 lbs.
digital, stainless finish with base		*(5.7 litres)*		
TF Server, 1.5 Gal *Countdown Timer*	42750.0010	1.5 gallon	2.8ft³	16 lbs.
digital, black finish with base		*(5.7 litres)*		

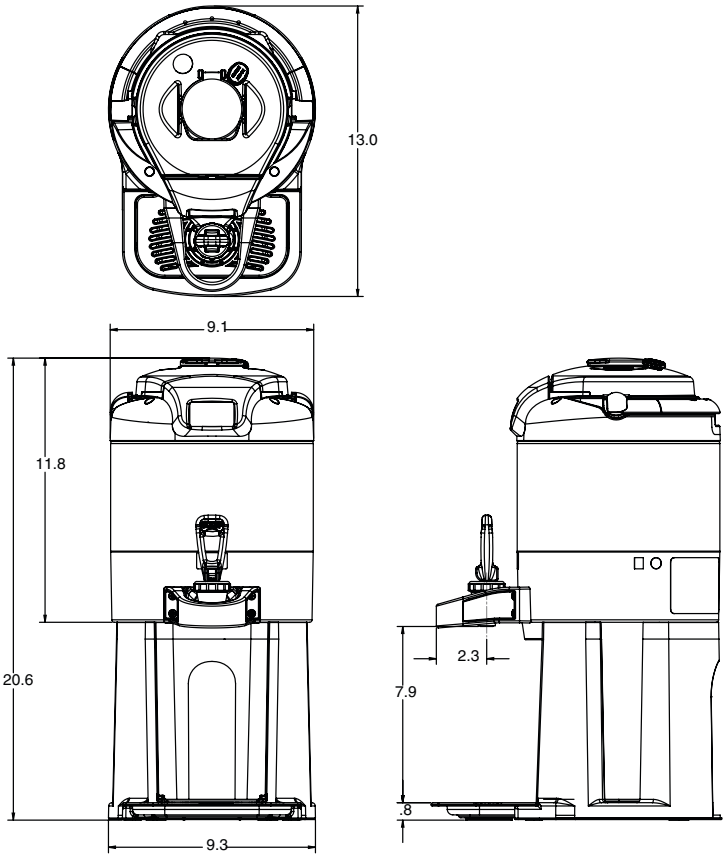

1 Gal TF Digital Server

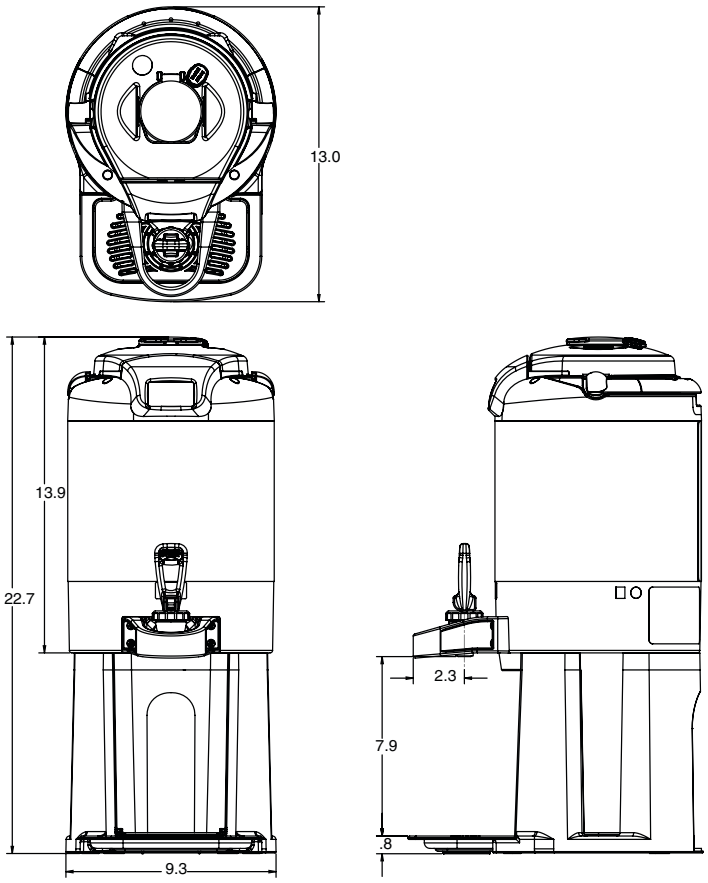

1.5 Gal TF Digital Server

Bunn-O-Matic® Corporation - 1400 Stevenson Drive Springfield, Illinois 62703 • 800-637-8606 • 217-529-6601 • Fax 217-529-6644 • www.bunn.com

BUNN® practices continuous product research and improvement. We reserve the right to change specifications and product design without notice. Such revisions do not entitle the buyer to corresponding changes, improvements, additions or replacements for previously purchased equipment.

All dimensions shown in inches.

3/11 © Bunn-O-Matic Corporation

Suburban Bowery