TRUE FOOD SERVICE EQUIPMENT, INC.
2001 East Terra Lane • O'Fallon, Missouri 63366
(636)240-2400 • Fax (636)272-2408 • (800)325-6152 • Intl Fax# (001)636-272-7546
Parts Dept. (800)424-TRUE • Parts Dept. Fax# (636)272-9471 • www.truemfg.com

Project Name: _____
Location: _____
Item #: _____ *Qty:* _____
Model #: _____

AIA #
SIS #

Model:
TSSU-27-12M-C

Food Prep Table:
Mega-Top Solid Door Sandwich/Salad Unit

TSSU-27-12M-C

- True's salad/sandwich units are designed with enduring quality that protects your long term investment.
- Oversized, environmentally friendly (134A), patented forced-air refrigeration system holds 33°F to 41°F (.5°C to 5°C).
- Complies with and listed under ANSI/NSF-7-1997-6.3.
- All stainless steel front, top and ends. Matching aluminum finished back.
- Stainless steel, patented, foam insulated lid and hood keep pan temperatures colder, lock in freshness and minimize condensation. Removable for easy cleaning.
- 8⅞" (226 mm) deep, ½" (13 mm) thick, full length removable cutting board included. Sanitary, high density, NSF approved white polyethylene provides tough preparation surface.
- Foamed-in-place using Ecomate. A new, innovative, high density, polyurethane insulation that has zero ozone depletion potential (ODP) and zero global warming potential (GWP).
- Heavy duty PVC coated wire shelves.
- Foamed-in-place using Ecomate. A high density, polyurethane insulation that has zero ozone depletion potential (ODP) and zero global warming potential (GWP).

ROUGH-IN DATA

Specifications subject to change without notice.
Chart dimensions rounded up to the nearest ⅛" (millimeters rounded up to next whole number).

Model	Doors	Shelves	Pans (top)	Cabinet Dimensions (inches) (mm) L**	D†	H*	HP	Voltage	Amps	NEMA Config.	Cord Length (total ft.) (total m)	Crated Weight (lbs.) (kg)
TSSU-27-12M-C	1	2	12	27⅝ 702	34⅛ 867	40⅜ 1026	⅕ ¼	115/60/1 230-240/50/1	4.9 2.9	5-15P ▲	7 2.13	235 107

** Length does not include⅛" (4 mm) each side for lid pins.
† Depth does not include 1" (26 mm) for rear bumpers.
* Height does not include 6¼" (159 mm) for castors or 6" (153 mm) for optional legs.

▲Plug type varies by country.

8/11 Printed in U.S.A.

APPROVALS:

AVAILABLE AT:

Suburban Bowery

Model:

TSSU-27-12M-C

Food Prep Table:

Mega-Top Solid Door Sandwich/Salad Unit

STANDARD FEATURES

DESIGN
- True's commitment to using the highest quality materials and oversized refrigeration systems provides the user with colder product temperatures, lower utility costs, exceptional food safety and the best value in today's food service marketplace.

REFRIGERATION SYSTEM
- Factory engineered, self-contained, capillary tube system using environmentally friendly (CFC free) 134A refrigerant.
- Oversized, factory balanced refrigeration system with guided airflow to provide uniform temperature in food pans and cabinet interior.
- Patented forced-air design holds 33°F to 41°F (.5°C to 5°C) product temperature in food pans and cabinet interior. Complies with and listed under ANSI/NSF-7-1997-6.3.
- Sealed, cast iron, self-lubricating evaporator fan motor(s) and larger fan blades give True sandwich/salad units a more efficient, low velocity, high volume airflow design.
- Condensing unit access in back of cabinet, slides out for easy maintenance.

CABINET CONSTRUCTION
- Exterior - stainless steel front, top and ends. Matching aluminum finished back.
- Interior - attractive, NSF approved, white aluminum liner. Stainless steel floor with coved corners.
- Insulation - entire cabinet structure and solid door are foamed-in-place using Ecomate. A high density, polyurethane insulation that has zero ozone depletion potential (ODP) and zero global warming potential (GWP).
- 5" (127 mm) diameter stem castors - locks provided on front set. 36" (915 mm) work surface height.

DOOR
- Stainless steel exterior with white aluminum liner to match cabinet interior.
- Door fitted with 12" (305 mm) long recessed handle that is foamed-in-place with a sheet metal interlock to ensure permanent attachment.
- Positive seal self-closing door(s) with 90°stay open feature. Door(s) swing within cabinet dimensions.
- Magnetic door gasket(s) of one piece construction, removable without tools for ease of cleaning.

SHELVING
- Two (2) adjustable, heavy duty PVC coated wire shelves 23¼"L x 16"D (591 mm x 407 mm). Four (4) chrome plated shelf clips included per shelf.
- Shelf support pilasters made of same material as cabinet interior; shelves are adjustable on½" (13 mm) increments.

MODEL FEATURES
- Evaporator is epoxy coated to eliminate the potential of corrosion.
- 8⅞" (226 mm) deep,½" (13 mm) thick, full length removable cutting board. Sanitary, high-density, NSF approved white polyethylene provides tough preparation surface.
- Stainless steel, patented, foam insulated lid and hood keep pan temperatures colder, lock in freshness and minimize condensation. Removable for easy cleaning.
- Comes standard with 12 (⅛size) 6⅞"L x 6¼"W x 4"D (175 mm x 159 mm x 102 mm) clear polycarbonate, NSF approved, food pans in countertop prep area.
- Countertop pan opening designed to fit varying size pan configurations with available pan divider bars. Varying size pans supplied by others.
- NSF-7 compliant for open food product.

ELECTRICAL
- Unit completely pre-wired at factory and ready for final connection to a 115/60/1 phase, 15 amp dedicated outlet. Cord and plug set included.

115/60/1
NEMA-5-15R

OPTIONAL FEATURES/ACCESSORIES
Upcharge and lead times may apply.
- ❑ 230 - 240V / 50 Hz.
- ❑ 6" (153 mm) standard legs.
- ❑ 6" (153 mm) seismic/flanged legs.
- ❑ 2½" (64 mm) diameter castors.
- ❑ Barrel locks (factory installed). Requires one per door.
- ❑ Additional shelves.
- ❑ Single overshelf.
- ❑ Double overshelf.
- ❑ Flat lid.
- ❑ Sneezeguard.
- ❑ 8⅞" (226 mm) deep,½" (13 mm) thick, composite cutting board.
- ❑ Crumb catcher. Requires crumb catcher cutting board for proper installation.
- ❑ Pan dividers.
- ❑ Exterior rectangular digital temperature display (factory installed).
- ❑ ADA compliant model with 34" (864 mm) work surface height.
- ❑ Remote cabinets (condensing unit supplied by others; system comes standard with 404A expansion valve and requires R404A refrigerant). Consult factory technical service department for BTU information. All remote units must be hard wired during installation.

PLAN VIEW

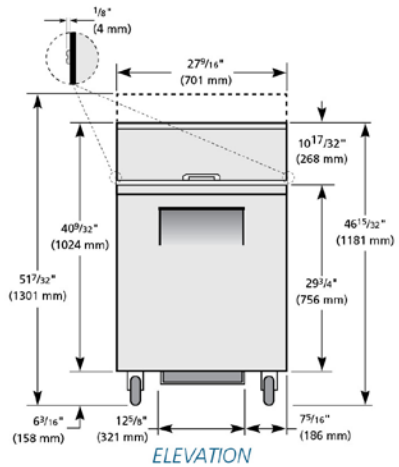

ELEVATION

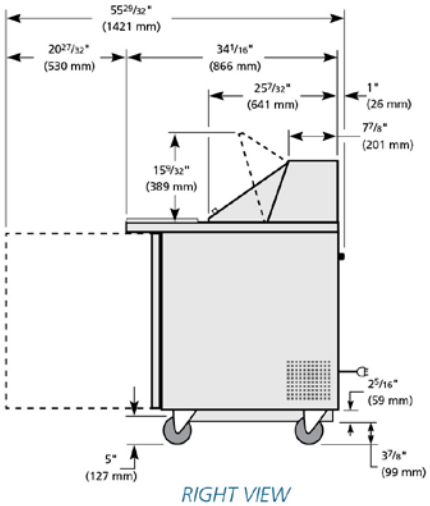

RIGHT VIEW

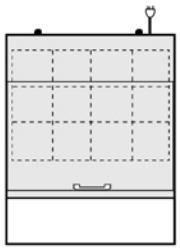

PAN LAYOUT

WARRANTY
One year warranty on all parts and labor and an additional 4 year warranty on compressor. (U.S.A. only)

METRIC DIMENSIONS ROUNDED UP TO THE NEAREST WHOLE MILLIMETER

SPECIFICATIONS SUBJECT TO CHANGE WITHOUT NOTICE

Model	Elevation	Right	Plan	3D	Back
TSSU-27-12M-C	TFNY40E	TFNY40S	TFNY40P	TFNY403	

TRUE FOOD SERVICE EQUIPMENT
2001 East Terra Lane • O'Fallon, Missouri 63366 • (636)240-2400 • Fax (636)272-2408 • (800)325-6152 • Intl. Fax# (001)636-272-7546 • www.truemfg.com

Suburban Bowery