WARING COMMERCIAL

Heavy-Duty Big Stix®

Immersion Blenders, Whisk Attachment and Accessories

The Big Stix®

WSB50
12" Immersion Blender

WSB55
14" Immersion Blender

WSB60
16" Immersion Blender

WSB65
18" Immersion Blender

WSB70
21" Immersion Blender

WSBPPW
10" Stainless Steel Whisk

c ETL US NSF

WARING COMMERCIAL

Heavy-Duty Big Stix® and Accessories

Specifications

Item	Electrical	Watts	Listings	Max RPM	Dimensions (H" x W" x D")	Warranty
WSB50	120 Volt, 6.25 Amps, 50/60 Hz	750	ETL, NSF	18,000	27" x 5" x 5.5"	Limited 1 Year
WSB55	120 Volt, 6.25 Amps, 50/60 Hz	750	ETL, NSF	18,000	29" x 5" x 5.5"	Limited 1 Year
WSB60	120 Volt, 6.25 Amps, 50/60 Hz	750	ETL, NSF	18,000	31" x 5" x 5.5"	Limited 1 Year
WSB65	120 Volt, 6.25 Amps, 50/60 Hz	750	ETL, NSF	18,000	33" x 5" x 5.5"	Limited 1 Year
WSB70	120 Volt, 6.25 Amps, 50/60 Hz	750	ETL, NSF	18,000	36" x 5" x 5.5"	Limited 1 Year
WSBPPW	120 Volt, 6.25 amps, 50/60 Hz	750	ETL, NSF	1,600	31" x 5" x 5.5"	Limited 1 Year

Ordering Information

Description	Catalog #	Std Pkg.	Ship Wt. (Lbs.)	Cubic Feet	UPC Code
12" Big Stik® Immersion Blender	WSB50	2	9.5	1.70	040072002137
14" Big Stik® Immersion Blender	WSB55	2	9.75	1.90	040072002120
16" Big Stik® Immersion Blender	WSB60	2	10.0	2.10	040072002113
18" Big Stik® Immersion Blender	WSB65	2	10.25	2.30	040072002878
21" Big Stik® Immersion Blender	WSB70	2	10.38	2.60	040072002885
12" Stainless Steel Shaft	WSB50ST	6	2.5	1.59	040072002540
14" Stainless Steel Shaft	WSB55ST	6	2.75	1.96	040072002557
16" Stainless Steel Shaft	WSB60ST	6	3.0	2.17	040072002564
18" Stainless Steel Shaft	WSB65ST	6	3.25	2.38	040072002922
21" Stainless Steel Shaft	WSB70ST	6	3.38	2.70	040072002939
10" Big Stik® Whisk	WSBPPW	2	22.0	2.94	040072008184
10" Whisk Attachment	WSB2W	4	18.2	1.20	040072009242
2 Stainless Steel Whipping Paddles	WSBWP	10	1.5	0.07	040072008504
Bowl Clamp	WSBBC	1	4.0	0.13	040072006937
Wall Mount Hanger	WSB01	64	32.1	1.66	040072002380
Big Stik® Power Pack	WSBPP	2	7.0	1.27	040072002649

Suburban Bowery

Big Stik® Heavy-Duty Immersion Blenders

The high-efficiency variable speed motor that powers Waring's Big Stik® Immersion Blenders drives through the thickest ingredients to produce sauces, batters and soups in just minutes. Complete with rubberized comfort grip and second handle (patent pending), the lightweight, ergonomic design allows for safe and controlled operation during any job, large or small. The easily removable stainless steel shafts are available in five sizes (up to 21") and are completely sealed and dishwasher safe. With the Big Stik® line, you can mix, purée and emulsify up to 50 gallons. Blend smoothly, and carry the Big Stik®.

Features

- **Heavy-Duty Motor** – High efficiency 1 HP motor, 750 watts, 18,000 RPMs processing speed on high
- **Variable Speed Motor** – Unlimited speed adjustment from 5,000 – 18,000 RPMs provides full control and consistency, from light mixing to puréeing and emulsifying
- **Lightweight and Ergonomic** – Rubberized comfort grip and second handle allow for safe and controlled operation
- **Completely Sealed Shafts** – Stainless steel shafts are easily removable and dishwasher safe
- **Continuous On Operation**
- **Versatility** – All five stainless steel shafts are interchangeable with one universal motor housing (Power pack – WSBPP)
- **Limited One Year Warranty**
- **ETL, NSF**

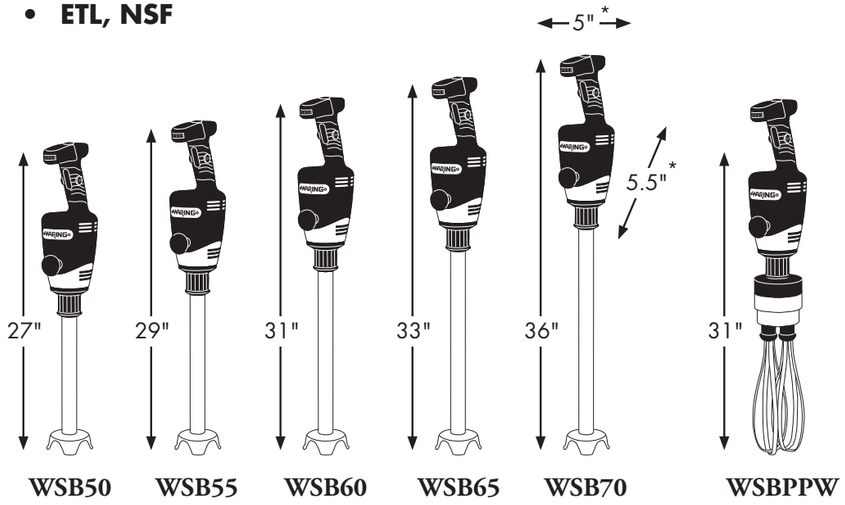

* 5" width and 5.5" depth are the same for all five immersion blenders and whisk

WARING® COMMERCIAL IMMERSION BLENDERS

Optional Accessories

Waring makes it easy to do more than just blend. The 10" Stainless Steel Whisk Attachment quickly transforms the Big Stik® into a gentle giant as it whips delicate egg whites, creams to any consistency and mashes potatoes in record time with its heavy-duty construction. The bowl clamp lightens the load for hands-free operation while the wall-mount hanger provides an easy storage option.

WSB2W
10" Stainless Steel Whisk Attachment fits entire Big Stik® Heavy-Duty Immersion Blender line

WSB01
Wall-mount hanger available for easy storage while unit is not in use

WSBPP
Power pack fits entire Big Stik® Heavy-Duty Immersion Blender line

WSB Series Big Stik® Heavy Duty Shafts
Stainless steel shafts are interchangeable with the WSBPP Power Pack

WSBBC
Bowl clamp for hands-free operation